DoersWindow MANUFACTURING
4901 Oak Fair Blvd., Tampa, FL 33610

9650 Fixed Window
Impact Rated
w/ Flange

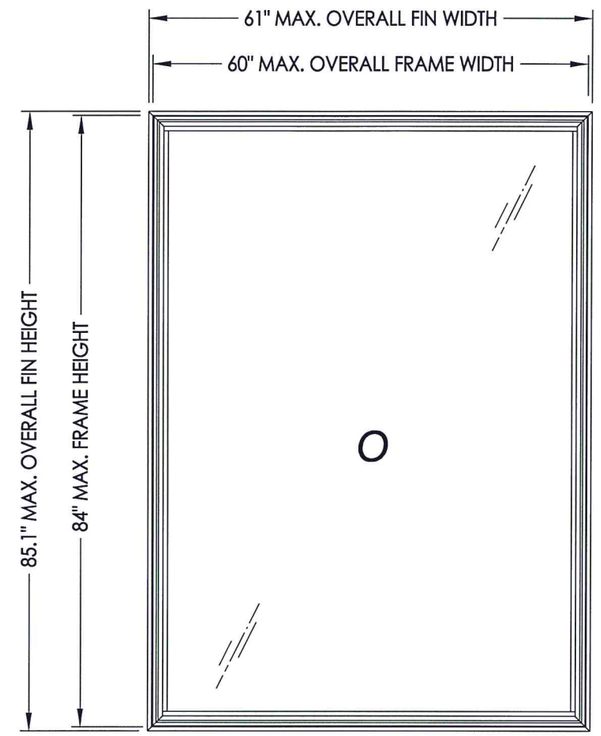

GENERAL NOTES

1. This product anchoring drawing has been evaluated and is in compliance with the 5th Edition (2014) Florida Building Code (FBC) excluding the "High Velocity Hurricane Zone" (HVHZ). See the Certification Agency Certificate for sizes, specifications & ratings.

2. Product anchors shall be as listed and spaced as shown on details. Anchor embedment to base material shall be beyond wall dressing or stucco.

3. When used in areas requiring wind borne debris protection, this product complies with Section 1609.1.2 of the FBC and does not require an impact resistant covering. This product meets missile level "D" and includes Wind Zone 4 as defined in ASTM E 1996 and Section 1609.1.2.2 of the FBC.

4. For 2x stud framing construction, anchoring of these units shall be the same as that shown for 2x buck masonry construction.

5. Site conditions that deviate from the details of this drawing require further engineering analysis by a licensed engineer or registered architect.

NOTE: VERTICAL ORIENTATION SHOWN (HORIZONTAL ORIENTATION ALSO APPROVED)

MAX. OVERALL FLANGE DIMENSION	MAX. OVERALL FRAME DIMENSION	MAX DAY LITE DIMENSION	GLASS TYPE	DESIGN PRESSURE (PSF)	
				POS.	NEG.
37.1" X 73.1"	36.0" X 72.0"	31.75" X 67.75""	G1	+70.0	-70.0
61.1" X 85.1"	60.0" X 84.0"	55.75" X 79.75"	G2	+60.0	-60.0

TABLE OF CONTENTS

SHEET#	DESCRIPTION
1	Typical elevations, design pressures & general notes
2	Horizontal cross sections
3	Buck anchoring
4	Frame anchoring
5	Bill of materials, components & glazing details

L. F. SCHMIDT LICENSE No. 43409 STATE OF FLORIDA PROFESSIONAL ENGINEER
6.26.15
Documents Prepared By:
Lyndon F. Schmidt
P.E. No. 43409
BUILDING CONSULTANTS, INC.
P.O. Box 230, Valrico, FL 33595
Phone No.: 813.659.9197
FBPE C.A. No. 9813

PRODUCT: Doers
PART OR ASSEMBLY: TYPICAL ELEVATION, DESIGN PRESSURES & GENERAL NOTES

NO.	DATE	REVISIONS	BY

DATE: 6/26/15
SCALE: N.T.S.
DWG. BY: JK
CHK. BY: LFS
DRAWING NO.: FL-15099.16
SHEET 1 OF 5

© 2015 R.W. BUILDING CONSULTANTS INC.

R:\Clients\Doers PERMANENT\Florida Product Approvals\FL-15099 Windows - Fixed\C - Drawings\FL-15099 (2014)\FL-15099.15-16.dwg, FL-15099.16

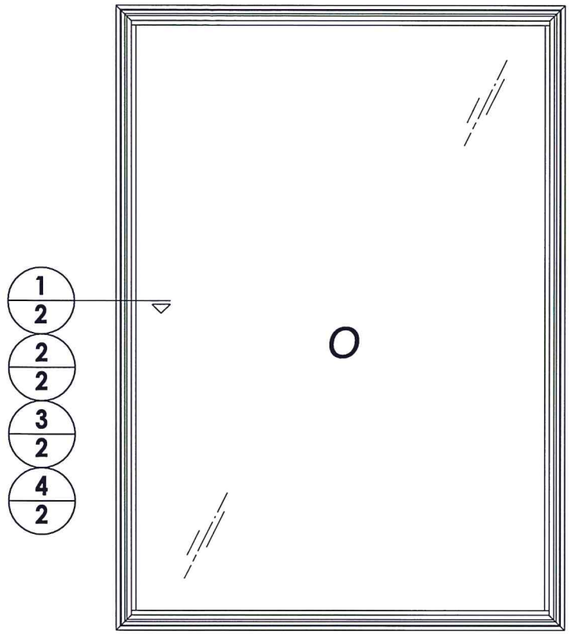

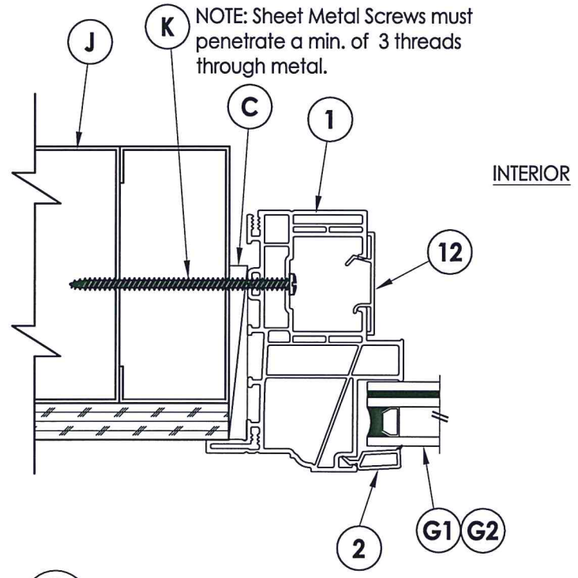

3/2 **HORIZONTAL CROSS SECTION**
Shown w/ Steel Stud Framing Option

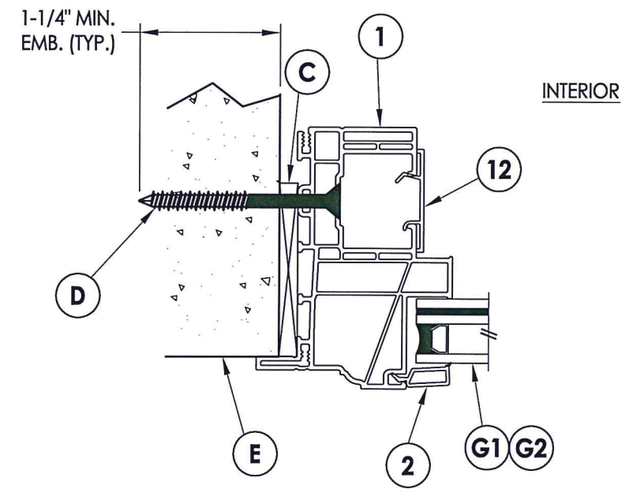

4/2 **HORIZONTAL CROSS SECTION**
Shown Direct to Masonry

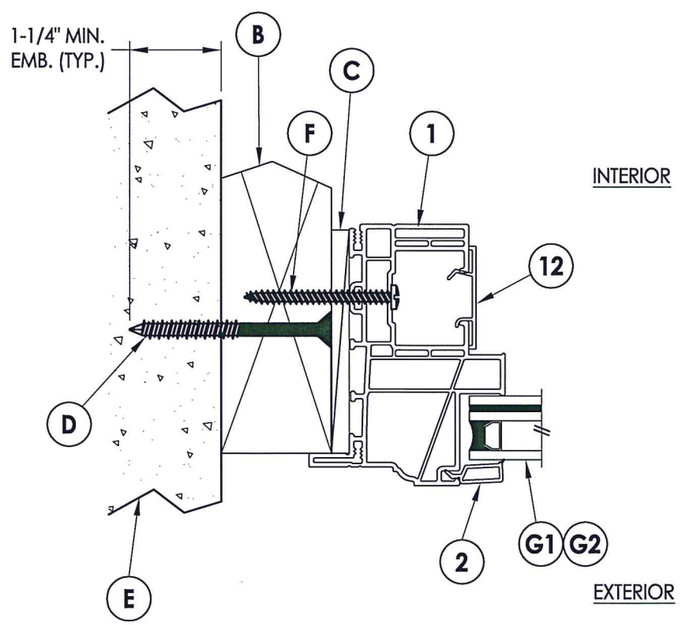

1/2 **HORIZONTAL CROSS SECTION**
2X Buck Masonry Construction

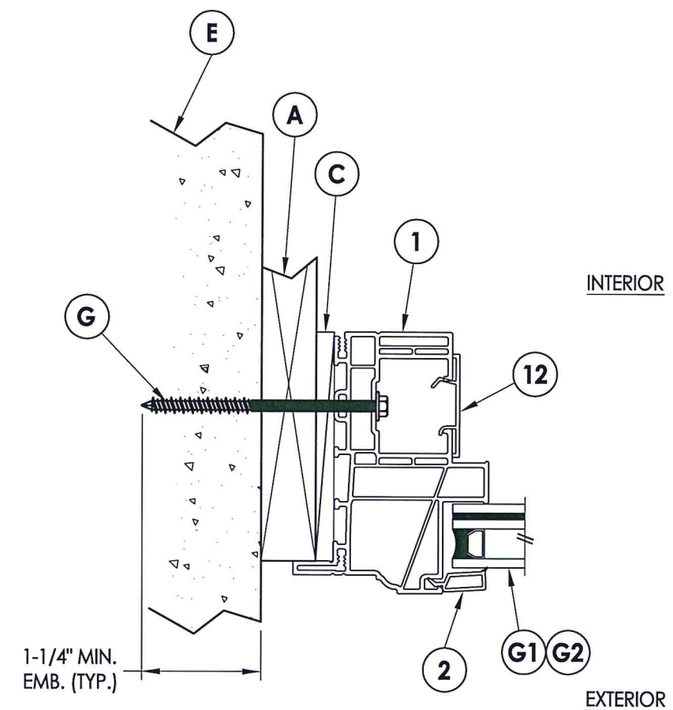

2/2 **HORIZONTAL CROSS SECTION**
1X Stud Construction

L. F. SCHMIDT
LICENSE
No. 43409
STATE OF FLORIDA
PROFESSIONAL ENGINEER

6.26.15

Documents Prepared By:
Lyndon F. Schmidt
P.E. No. 43409

RW
BUILDING CONSULTANTS, INC.
P.O. Box 230, Valrico, FL 33595
Phone No.: 813.659.9197
FBPE C.A. No. 9813

PRODUCT: Doers

PART OR ASSEMBLY: HORIZONTAL CROSS SECTIONS

NO.	DATE	REVISIONS	BY

DATE: 6/26/15
SCALE: N.T.S.
DWG. BY: JK
CHK. BY: LFS
DRAWING NO.: FL-15099.16
SHEET 2 OF 5

© 2015 R.W. BUILDING CONSULTANTS INC.

R:\Clients\Doers PERMANENT\Florida Product Approvals\FL-15099 Windows - Fixed\C - Drawings\FL-15099 (2014)\FL-15099.15-16.dwg, 2-2

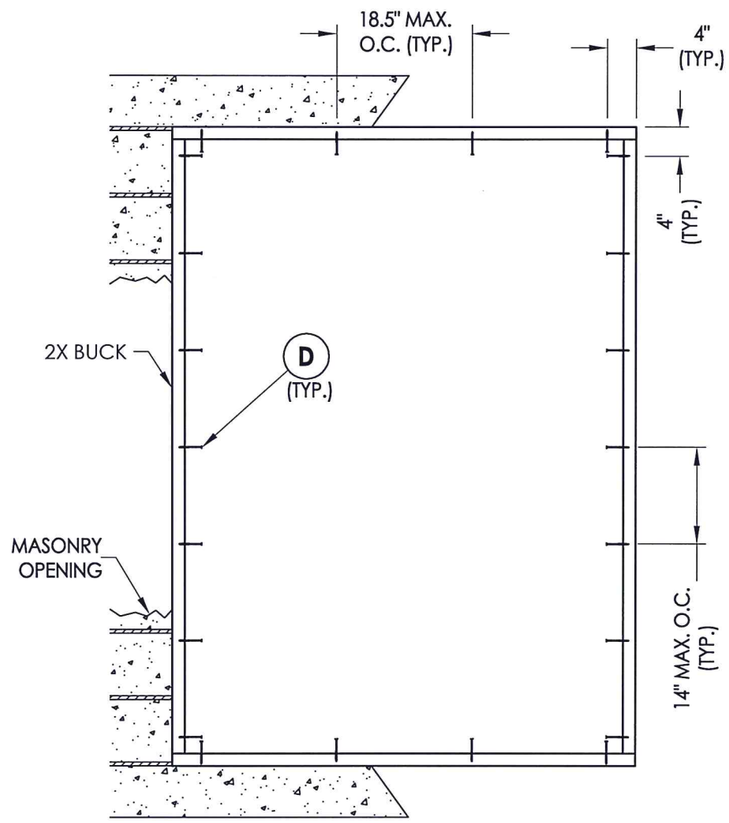

BUCK ANCHORING
60" x 84" MAX. FRAME SIZE

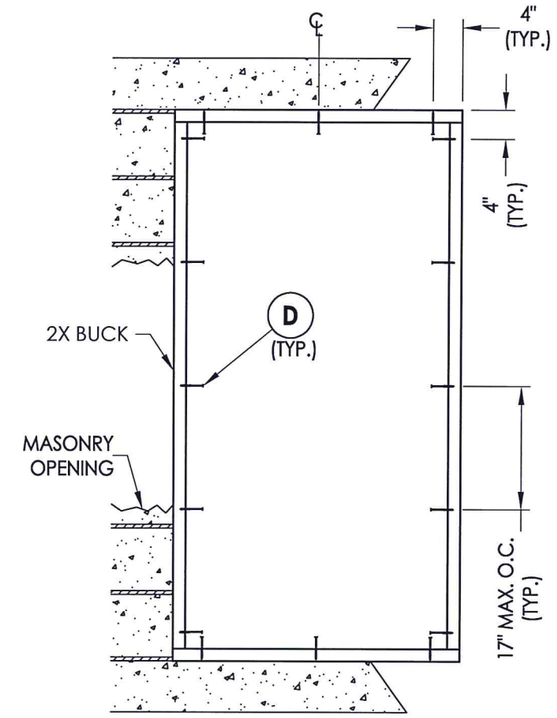

BUCK ANCHORING
36" x 72" MAX. FRAME SIZE

CONCRETE ANCHOR NOTES:

1. *Concrete anchor locations at the corners may be adjusted to maintain the min. edge distance to mortar joints.*
2. *Concrete anchor locations noted as "MAX. ON CENTER" must be adjusted to maintain the min. edge distance to mortar joints, additional concrete anchors may be required to ensure the "MAX. ON CENTER" dimension are not exceeded.*
3. *Concrete anchor table:*

ANCHOR TYPE	ANCHOR SIZE	MIN. EMBEDMENT	MIN. CLEARANCE TO MASONRY EDGE	MIN. CLEARANCE TO ADJACENT ANCHOR
ITW TAPCON®	1/4"	1-1/4"	2"	4"
ELCO ULTRACON®	1/4"	1-1/4"	1"	4"

WOOD SCREW INSTALLATION NOTES:

1. *Maintain a minimum 5/8" edge distance, 1" end distance, & 1" o.c. spacing of wood screws to prevent the splitting of wood.*

LYNDON F. SCHMIDT
LICENSE
No. 43409
STATE OF FLORIDA
PROFESSIONAL ENGINEER

6.26.15

Documents Prepared By:
Lyndon F. Schmidt
P.E. No. 43409

RW BUILDING CONSULTANTS, INC.
P.O. Box 230, Valrico, FL 33595
Phone No.: 813.659.9197
FBPE C.A. No. 9813

PRODUCT: *Doors*

PART OR ASSEMBLY: *BUCK ANCHORING*

NO.	DATE	BY

REVISIONS

DATE: 6/26/15
SCALE: N.T.S.
DWG. BY: JK
CHK. BY: LFS
DRAWING NO.: FL-15099.16
SHEET 3 OF 5

© 2015 R.W. BUILDING CONSULTANTS INC.

R:\Clients\Doers PERMANENT\Florida Product Approvals\FL-15099 Windows - Fixed\C - Drawings\FL-15099 (2014)\FL-15099.15-16.dwg, 3-2

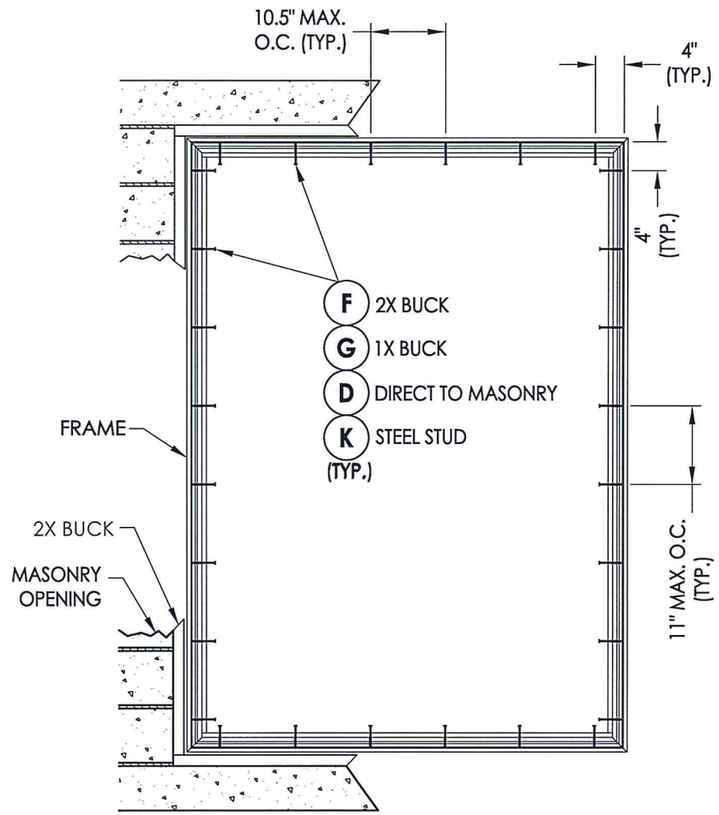

FRAME ANCHORING
60" x 84" MAX. FRAME SIZE

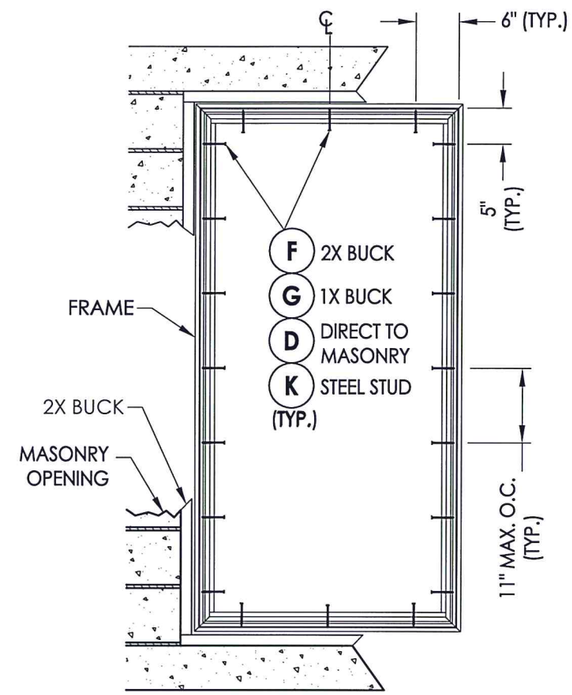

FRAME ANCHORING
36" x 72" MAX. FRAME SIZE

CONCRETE ANCHOR NOTES:

1. *Concrete anchor locations at the corners may be adjusted to maintain the min. edge distance to mortar joints.*
2. *Concrete anchor locations noted as "MAX. ON CENTER" must be adjusted to maintain the min. edge distance to mortar joints, additional concrete anchors may be required to ensure the "MAX. ON CENTER" dimension are not exceeded.*
3. *Concrete anchor table:*

ANCHOR TYPE	ANCHOR SIZE	MIN. EMBEDMENT	MIN. CLEARANCE TO MASONRY EDGE	MIN. CLEARANCE TO ADJACENT ANCHOR
ITW TAPCON®	1/4"	1-1/4"	2"	4"
ELCO ULTRACON®	1/4"	1-1/4"	1"	4"

WOOD SCREW INSTALLATION NOTES:

1. *Maintain a minimum 5/8" edge distance, 1" end distance, & 1" o.c. spacing of wood screws to prevent the splitting of wood.*

L. F. SCHMIDT LICENSE No. 43409 STATE OF FLORIDA PROFESSIONAL ENGINEER

6.26.15

Documents Prepared By:
Lyndon F. Schmidt
P.E. No. 43409

R.W. BUILDING CONSULTANTS, INC.
P.O. Box 230, Valrico, FL 33595
Phone No.: 813.659.9197
FBPE C.A. No. 9813

PRODUCT: *Doors*

PART OR ASSEMBLY: *FRAME ANCHORING*

NO.	DATE	REVISIONS	BY

DATE: 6/26/15
SCALE: N.T.S.
DWG. BY: JK
CHK. BY: LFS
DRAWING NO.: FL-15099.16
SHEET 4 OF 5

© 2015 R.W. BUILDING CONSULTANTS INC.

R:\Clients\Doers PERMANENT\Florida Product Approvals\FL-15099 Windows - Fixed\C - Drawings\FL-15099 (2014)\FL-15099.15-16.dwg, 4-2

BILL OF MATERIALS

ITEM #	DESCRIPTION	MATERIAL
A	1X BUCK (SG >= 0.42)	WOOD
B	2X BUCK (SG >= 0.42)	WOOD
C	1/4" MAX. SHIM SPACE	-
D	1/4" X 2-3/4" PFH ELCO OR ITW CONCRETE SCREW	STEEL
E	MASONRY - 3,000 PSI MIN. CONCRETE CONFORMING TO ACI 301 OR HOLLOW BLOCK CONFORMING TO ASTM C90	CONCRETE
F	#10 X 2" PPH SMS (1-1/8" MIN. EMBEDMENT)	STEEL
G	1/4" X 3-1/4" HWH ELCO OR ITW CONCRETE SCREW	STEEL
J	STEEL STUD Min. Thk .033" (ASTM A653 GRADE 33 Fy=33 ksi min., Fu=45 ksi min.)	STEEL
K	#10 PPH SELF-DRILLING SMS	STEEL
1	EXTRUDED VINYL FRAME (437)*	RIGID PVC
2	EXTRUDED VINYL GLAZING BEAD (736A)*	RIGID PVC
12	FRAME ADAPTER	RIGID PVC

* THE APPROVED WHITE RIGID PVC EXTERIOR EXTRUSIONS FOR WINDOWS ARE TO BE PRODUCED BY EXTRUDERS LICENSEES IN "AAMA CERTIFICATION PROGRAMS FOR RIGID PVC EXTRUSIONS".

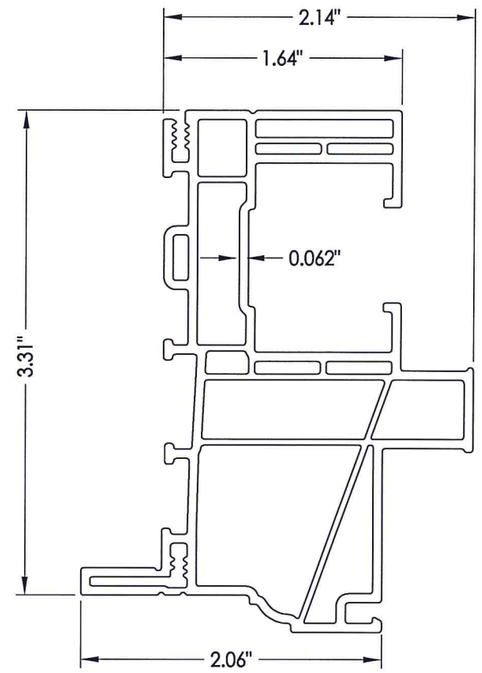

1 FRAME

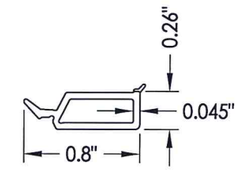

2 GLAZING BEAD

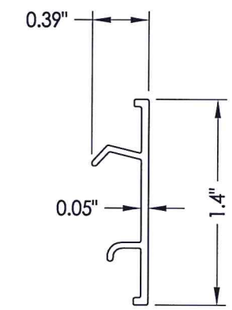

12 FRAME ADAPTER

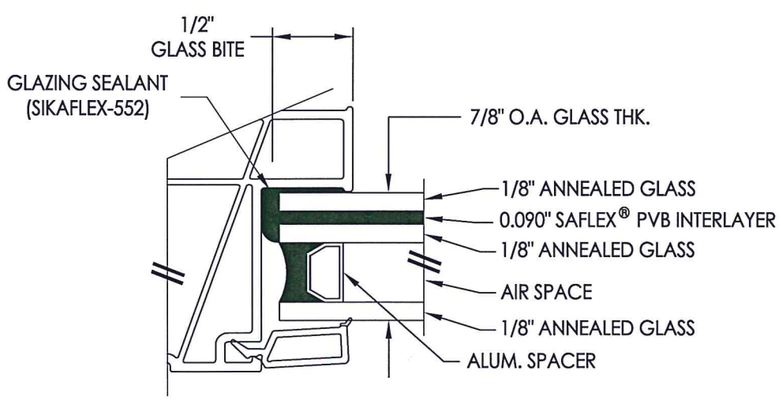

G1 GLAZING DETAIL

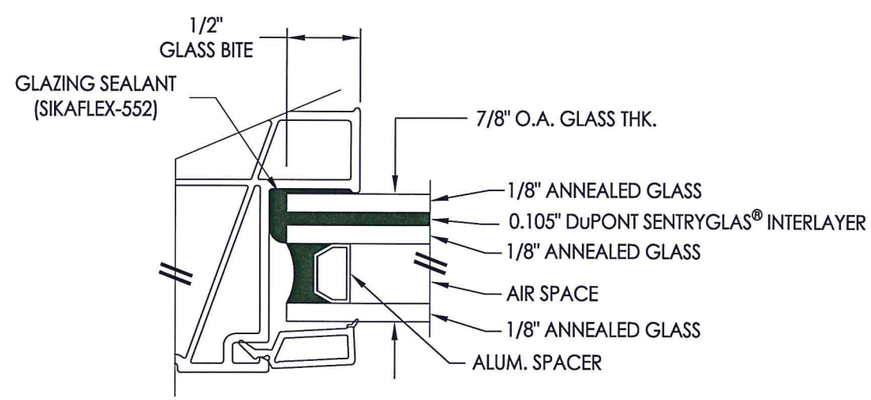

G2 GLAZING DETAIL

L.F. SCHMIDT LICENSE No. 43409 STATE OF FLORIDA PROFESSIONAL ENGINEER

6.26.15

Documents Prepared By:
Lyndon F. Schmidt
P.E. No. 43409

RW BUILDING CONSULTANTS, INC.
P.O. Box 230, Valrico, FL 33595
Phone No.: 813.659.9197
FBPE C.A. No. 9813

PRODUCT: Doors

PART OR ASSEMBLY: BILL OF MATERIALS, COMPONENTS & GLAZING DETAILS

NO.	DATE	BY	REVISIONS

DATE: 6/26/15
SCALE: N.T.S.
DWG. BY: JK
CHK. BY: LFS
DRAWING NO.: FL-15099.16
SHEET 5 OF 5

© 2015 R.W. BUILDING CONSULTANTS INC.

R:\Clients\Doers PERMANENT\Florida Product Approvals\FL-15099 Windows - Fixed\C - Drawings\FL-15099 (2014)\FL-15099.15-16.dwg, 5-2